8 S610 SPRING LOADED CASTERS

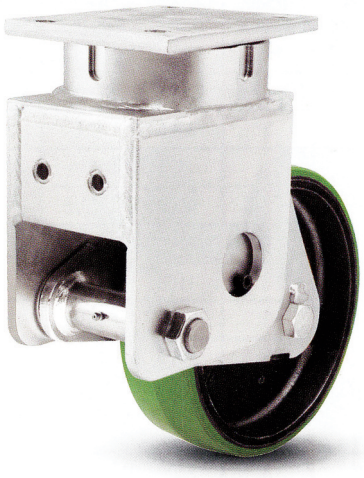

3,000 LBS. LOAD CAPACITY KINGPINLESS TYPE CASTERS

- **Load Springs:** Different load springs for each series permits wide variation in ride "softness".
- **Complete Line:** Available on all 8KSL models.
- **Swivel Section:** Kingpinless design. Ball bearing mounted in a machined raceway.
- **Axle:** 3/4" diameter standard. Optional 1" diameter available.
- Alternate or custom caster configurations available.

Our newly designed spring loaded casters offer greater capacity and protection from damaging shock or unwanted vibration and movement. Noise levels are reduced through the dampening effect of these casters.

We offer many custom spring loaded solutions for the automotive and aviation industry.

TYPICAL APPLICATIONS

- Body dolly carts
- Engine dollies
- Material carts
- Chassis rack carts
- Paint line dollies
- Towed trash gondolas
- Aviation ground support
- Aircraft tripod jacks
- Shock sensitive loads

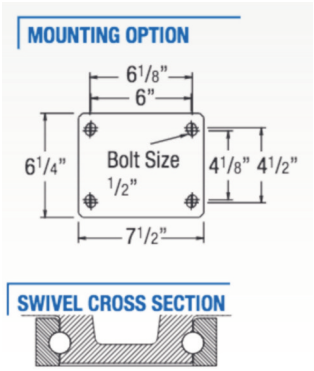

TOP PLATE: (STANDARD)

Plate Size: 6-1/4" x 7-1/2"
Bolt Holes: 4-1/2" x 6-1/8" slotted to 4-1/8" x 6-1/2"
Bolt Size: 1/2"

8 S610 SPRING LOADED CASTERS

NYLACRON™ WHEELS PRECISION BALL BEARINGS

NY/MD

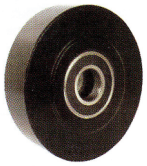

Part Number Swivel Caster	Part Number Rigid Caster	Wheel Diameter (inch)	Tread Width (inch)	Load Capacity (lbs)	Overall Height (inch)	Swivel Lead (inch)
S610S63NYMD	S610R63NYMD	6	3	3000	7-1/2	1-3/8
S610S83NYMD	S610R83NYMD	8	3	3000	10-1/8	2-1/16
S610S103NYMD	S610R103NYMD	10	3	3000	11-1/2	2-1/4
S610S123NYMD	S610R123NYMD	12	3	3000	13-1/2	2-11/16

POLYURETHANE TREAD ON CAST IRON PRECISION BALL BEARINGS

PF

Part Number Swivel Caster	Part Number Rigid Caster	Wheel Diameter (inch)	Tread Width (inch)	Load Capacity (lbs)	Overall Height (inch)	Swivel Lead (inch)
S610S63PF	S610R63PF	6	3	3000	11-3/4	4-1/2
S610S83PF	S610R83PF	8	3	3000	12-3/4	4-1/2
S610S103PF	S610R103PF	10	3	3000	14-7/8	4-1/2
S610S123PF	S610R123PF	12	3	3000	16-7/8	5-5/16

VULKOLLAN™ THICK TREAD POLYURETHANE ROLLER BEARING

VX

- Tapered (09)
- Precision Ball Bearings (28).
- Straight Roller Bearing (01)

Part Number Swivel Caster	Part Number Rigid Caster	Wheel Diameter (inch)	Tread Width (inch)	Load Capacity (lbs)	Overall Height (inch)	Swivel Lead (inch)
S610VX08509	S610VX08509R	8	3	3000	12-3/4	4-1/2
S610VX10509	S610VX10509R	10	3	3000	14-7/8	4-1/2

POLYURETHANE TREAD ON CAST IRON PRECISION BALL BEARINGS

PR

- Precision Ball Bearings (28)
- Tapered (09)

Part Number Swivel Caster	Part Number Rigid Caster	Wheel Diameter (inch)	Tread Width (inch)	Load Capacity (lbs)	Overall Height (inch)	Swivel Lead (inch)
S610PR10528	S610PR10528R	10	3	2400	14-7/8	4-1/2
S610PR12528	S610PR12528R	12	3	2800	16-7/8	5-5/16

SWIVEL-EAZ™ 95A CROWN TREAD PRECISION BALL BEARINGS

SWE/CT

- Crown tread also available in 70A, 80A, 60D & 75D durometer
- Available in Flat Tread add FT

Part Number Swivel Caster	Part Number Rigid Caster	Wheel Diameter (inch)	Tread Width (inch)	Load Capacity (lbs)	Overall Height (inch)	Swivel Lead (inch)
S610S63SWECT	S610R63SWECT	6	3	1100	11-3/4	4-1/2
S610S83SWECT	S610R83SWECT	8	3	2400	12-3/4	4-1/2
S610S103SWECT	S610R103SWECT	10	3	3000	14-7/8	4-1/2