3 MEDIUM DUTY CASTERS

Caster Type	Page
3C BB-Tek® Bi-Brake Caster	2-3
3RSS Stainless Steel Kingpin Casters with Pevolon® Wheels	4
3R Kingpinless Casters with Elastic Rubber Wheels	5
3RC Kingpinless Casters with Conductive Pevothan® Wheels	6
3RC Conductive Pevothan®/Pevolon® Wheels	7
3RC Kingpinless Casters with Conductive Pevolon® Wheels	8
3RCSS Stainless Steel Kingpinless Casters with Conductive Pevolon® Wheels	9

3 3C BB-TEK® BRAKE CASTERS

BB-TEK TWO-IN-ONE BI-BRAKE PRESSED STEEL CASTERS

BB-Tek Casters are recommended for medium duty applications on equipment such as portable computers, instruments, test or equipment stations and were designed for frequent portability. Precision ball bearings in both the swivel and wheels, ease of rollability and maneuvering are its main features.

- Swivel can be locked in steering direction, while wheel remains free to roll, allowing straight line tracking
  OR
- Both swivel and wheel can be simultaneously locked for no movement.

KEY FEATURES

- Swivel Head and Wheel are fitted with precision ball bearings to ensure maximum swiveling, ease and rollability with maximum quietness.
- **Unique, patented BB-TEK Bi-Braking System provides two kinds of braking systems, Dual Locking and/or Directional Locking Brakes, in same caster.**

FEATURES:

- **Ergonomic**
- **Maintenance-Free**
- **Ease of Rollability**
- **Available with plastic covers**

Pedal 1: Locks the swivel in the steering direction but wheel remains free for straight line tracking.

Pedal 2: Locks the wheel only.

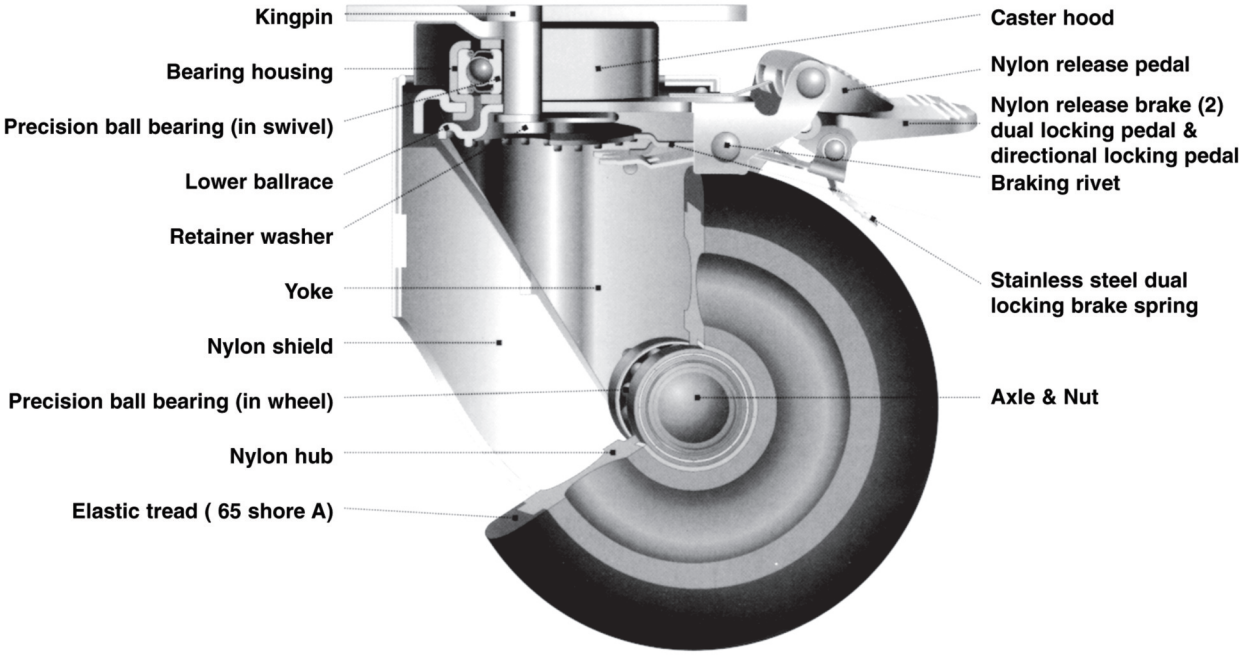

3 3C BB-TEK® BI-BRAKE CASTERS

Plate Mounting Options

25.4 mm = 1 inch

Mtg. Code	Top Plate Size (mm)	Bolt Hole Spacing (mm)	Mounting Bolt Size (mm)
P1	95 x 70	75 x 45/72 x 52	9
P2	77 x 67	61.5 x 52/56 x 45	8.5
P3*	93 x 60	76.5/73 x 45	8
P6	114 x 101.6	93 x 67	9
P7*	114 x 101.6	76 x 76/92 x 67	9.5
P8	100.3 x 100	80 x 80	10.5

*US top plate

P1, P2 and P3 plates are available for 125 mm models. P6, P7 and P8 plates are available for 150 mm and 200 mm models.
To order optional plate sizes change code.
Example: **3CBB6TTP3**.

NEW TOP PLATE SIZE P4 TP Size: 2-3/8" x 3-5/8" • Bolt Pattern: 1-3/4" x 2-7/8" to 3" • Bolt Dia.: 5/16"

NEW TOP PLATE SIZE P5 TP Size: 4" x 4-1/2" • Bolt Pattern: 2-5/8" x 3-5/8" to 3 x 3" • Bolt Dia.: 3/8"

Wheel Diameter (mm)	Tread Width (mm)	Wheel Type	Wheel Bearing	Capacity (lbs)	Swivel Top Plate Bi-Brake Model Number	Free Swivel Model Number	Load Height (mm)	Swivel Radius (mm)
125	32	Thermoplastic Tread	Precision Ball	220	**3CBB5TT**	**3C5TTS**	161.0	78.0
125	32	Elastic Rubber Tread	Precision Ball	220	**3CBB5ER**	**3C5ERS**	161.0	78.0
125	32	Gray Polyurethane Tread	Precision Ball	220	**3CBB5GP**	**3C5GPS**	161.0	78.0
150	40	Thermoplastic Tread	Precision Ball	330	**3CBB6TT**	**3C6TTS**	196.5	92.0
150	40	Elastic Rubber Tread	Precision Ball	330	**3CBB6ER**	**3C6ERS**	196.5	92.0
200	40	Elastic Rubber Tread	Precision Ball	330	**3CBB8ER**	**3C8ERS**	250.5	98.0

All casters available with ABS plastic covers. Change ST to TS.

Other type wheels are available including Nylcron™ Wheels.

Round Stem Mounting Options

25.4 mm = 1 inch

Mtg. Code	Stem Diameter (mm)	Stem Length (mm)	Hole to Base (mm)	Mounting Hole (mm)
R8	22	45	19	M8 x 1.25
R9	28	45	19	M8 x 1.25
R16	25.6	45	19	M8 x 1.25

To order optional stem sizes change stem code.
Example: **3CBB6TTR16**.

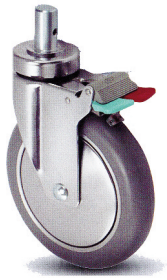

Wheel Diameter (mm)	Tread Width (mm)	Wheel Type	Wheel Bearing	Capacity (lbs)	Round Stem Bi-Brake Model Number	Free Swivel Model Number	Load Height (mm)	Swivel Radius (mm)
125	32	Thermoplastic Tread	Precision Ball	220	**3CBB5TTR**	**3C5TTSR**	161.0	78.0
125	32	Elastic Rubber Tread	Precision Ball	220	**3CBB5ERR**	**3C5ERSR**	161.0	78.0
125	32	Gray Polyurethane Tread	Precision Ball	220	**3CBB5GPR**	**3C5GPSR**	161.0	78.0
150	40	Thermoplastic Tread	Precision Ball	330	**3CBB6TTR**	**3C6TTSR**	196.5	92.0
150	40	Elastic Rubber Tread	Precision Ball	330	**3CBB6ERR**	**3C6ERSR**	196.5	92.0
200	40	Elastic Rubber Tread	Precision Ball	330	**3CBB8ERR**	**3C8ERSR**	250.5	98.0

All casters available with ABS plastic covers. Change ST to TS. Specify stem size. ie, suffix: R16

Other type wheels are available including Nylcron™ Wheels.

3 3RSS STAINLESS STEEL KINGPIN CASTERS WITH PEVOLON® WHEELS

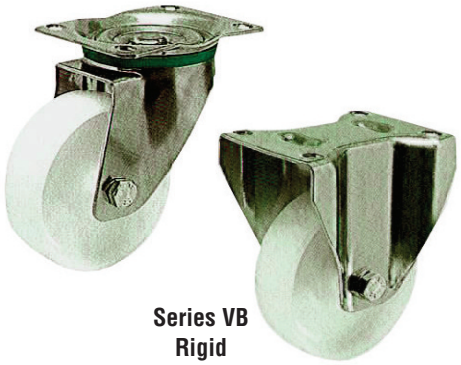

Series VL
Swivel

Series VB
Rigid

Series VL

Swivel Part Number	Diameter (mm)	Width (mm)	OAH (mm)	Top Plate (mm)	Bolt Spacing (mm)	Bolt Size (mm)	Swl Offset (VL Series)	Load Cap. (lbs)
VL080/35/1L	80	35	108	105 x 85	80 x 60	9	38	330
VL100/34/1L	100	34	128	105 x 85	80 x 60	9	38	330
VL125/40/1L	125	40	155	105 x 85	80 x 60	9	45	330
VL125/40/1	125	40	161	135 x 110	105 x 80	11	55	660
VL150/42/1	150	42	194	135 x 110	105 x 80	11	55	880
VL160/40/1	160	40	197	135 x 110	105 x 80	11	55	880
VL200/50/1	200	50	237	135 x 110	105 x 80	11	55	880

Series VB

Rigid Part Number	Diameter (mm)	Width (mm)	OAH (mm)	Top Plate (mm)	Bolt Spacing (mm)	Bolt Size (mm)	Swl Offset (VL Series)	Load Cap. (lbs)
VB080/30/3RL	80	30	108	105 x 85	80 x 60	9	38	330
VB100/34/3RL	100	34	128	105 x 85	80 x 60	9	38	330
VB125/40/3RL	125	40	155	105 x 85	80 x 60	9	45	330
VB125/40/3R	125	40	161	135 x 110	105 x 80	11	55	660
VB150/42/3R	150	42	194	135 x 110	105 x 80	11	55	880
VB160/40/3R	160	40	197	135 x 110	105 x 80	11	55	880
VB200/50/3R	200	50	237	135 x 110	105 x 80	11	55	880

1 kg = 2.2 lbs
25.4 mm = 1 inch

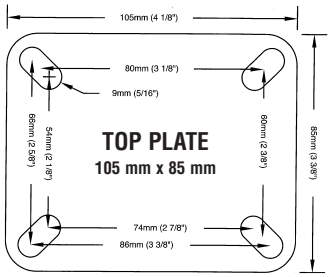

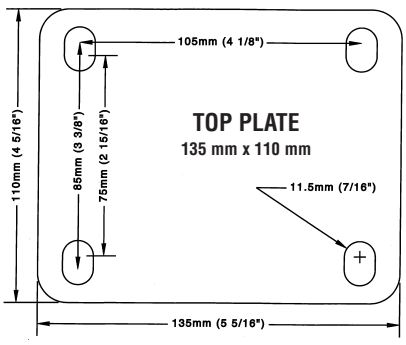

Swivel total lock brake
Specify: ...VLF

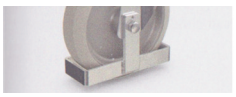

Toe guard
Specify: ...PRO

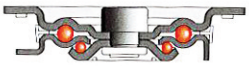

Kingpin swivel caster cross section a load capacity up to 300 kg.

Swivel section made of pressed steel, zinc chromed with double ball bearings, dust and splash proof, riveted kingpin and grease zerk. Total locking device on the trailing side of the housing, blocks rolling and swivel motion simultaneously.

Nylcron™ Wheels with or without stainless steel ball bearings available with any above series rigs.

3 3R KINGPINLESS CASTERS WITH ELASTIC RUBBER WHEELS

Series 26
Rigid

Series 25
Swivel

Model Number	Wheel Diameter (mm)	Wheel Width (mm)	Overall Height (mm)	Top Plate Size (mm)	Bolt Hole Spacing (mm)	Bolt Hole Diameter (mm)	Offset (mm)	Load Capacity (kg)
25/100/40/5L	100	40	140	105 x 85	80 x 60	9	45	160
25/100/40/5	100	40	148	135 x 110	105 x 80	11	50	160
25/125/40/5L	125	40	165	105 x 85	80 x 60	9	45	225
25/125/50/5	125	50	178	135 x 110	105 x 80	11	50	225
25/160/50/5	160	50	210	135 x 110	105 x 80	11	50	300
25/200/50/5	200	50	250	135 x 110	105 x 80	11	55	400
25/300/60/5	300	60	347	200 x 160	160 x 120	15	73	700

Swivel Caster
ELASTIC RUBBER wheel
Precision ball bearings /5
Aluminum core.

Model Number	Wheel Diameter (mm)	Wheel Width (mm)	Overall Height (mm)	Top Plate Size (mm)	Bolt Hole Spacing (mm)	Bolt Hole Diameter (mm)	Load Capacity (kg)
26/100/40/5L	100	40	140	105 x 85	80 x 60	9	160
26/100/40/5	100	40	148	135 x 110	105 x 80	11	160
26/125/40/5L	125	40	165	105 x 85	80 x 60	9	225
26/125/50/5	125	50	178	135 x 110	105 x 80	11	225
26/160/50/5	160	50	210	135 x 110	105 x 80	11	300
26/200/50/5	200	50	250	135 x 110	105 x 80	11	400
26/300/60/5	300	60	347	200 x 160	160 x 120	15	700

Rigid Caster
ELASTIC RUBBER wheel
Precision ball bearings /5
Aluminum core.

1 kg = 2.2 lbs
25.4 mm = 1 inch

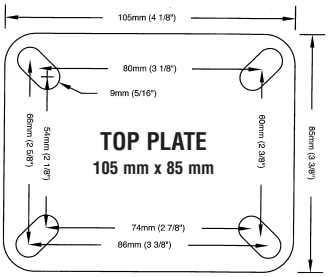

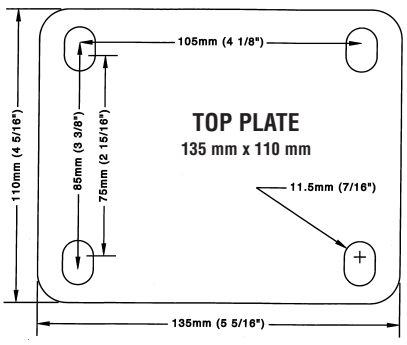

Swivel total lock brake
Specify: 25 F/...

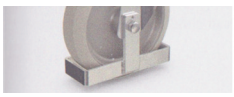

Toe guard
Specify: ...PRO

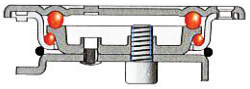

Kingpinless swivel caster cross section a load capacity up to 700 kg.

Swivel section made of pressed steel, zinc chromed with double ball bearings, dust and splash proof, riveted kingpin and grease zerk. Total locking device on the trailing side of the housing, blocks rolling and swivel motion simultaneously.

Nylcron™ Wheels with ball bearings available with any above series rigs.

3 3RC KINGPINLESS CASTERS WITH CONDUCTIVE PEVOTHAN® WHEELS

Series 52 XPU/5
Rigid

Series 51 XPU/5
Swivel

Model Number	Wheel Diameter (mm)	Wheel Width (mm)	Overall Height (mm)	Top Plate Size (mm)	Bolt Hole Spacing (mm)	Bolt Hole Diameter (mm)	Offset (mm)	Load Capacity (kg)
51 XPU/080/35/5L	80	35	108	105 x 85	80 x 60	9	45	120
51 XPU/100/40/5GH	100	40	140	135 x 110	105 x 80	11	55	200
51 XPU/125/45/5	125	45	164	135 x 110	105 x 80	11	55	250
51 XPU/160/50/5	160	50	199	135 x 110	105 x 80	11	55	300
51 XPU/200/50/5	200	50	239	135 x 110	105 x 80	11	55	400

Swivel Caster
ELECTRICALLY CONDUCTIVE PEVOTHAN® wheels.
Precision ball bearings /5
PEVOTHAN® core.

1 kg = 2.2 lbs
25.4 mm = 1 inch

Model Number	Wheel Diameter (mm)	Wheel Width (mm)	Overall Height (mm)	Top Plate Size (mm)	Bolt Hole Spacing (mm)	Bolt Hole Diameter (mm)	Load Capacity (kg)
51 XPU/080/35/5L	80	35	108	105 x 85	80 x 60	9	120
51 XPU/100/40/5GH	100	40	140	135 x 110	105 x 80	11	200
51 XPU/125/45/5	125	45	164	135 x 110	105 x 80	11	250
51 XPU/160/50/5	160	50	199	135 x 110	105 x 80	11	300
51 XPU/200/50/5	200	50	239	135 x 110	105 x 80	11	400

Rigid Caster
ELECTRICALLY CONDUCTIVE PEVOTHAN® wheels.
Precision ball bearings /5
PEVOTHAN® core.

1 way directional lock not available for plate 105 x 85 mm.

1 kg = 2.2 lbs
25.4 mm = 1 inch

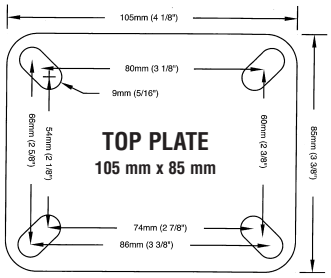

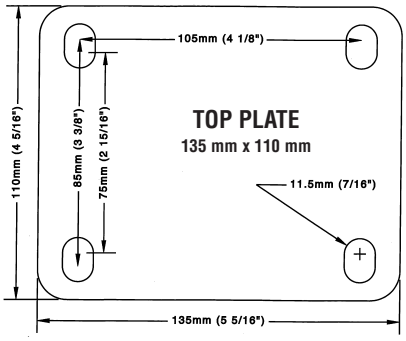

Swivel total lock brake
Specify: 51 F/...

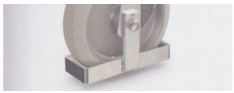

Toe guard
Specify: ...PRO

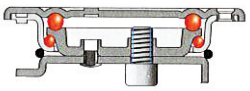

Kingpinless swivel caster cross section a load capacity up to 700 kg.

Swivel section made of pressed steel, zinc chromed with double ball bearings, dust and splash proof, riveted kingpin and grease zerk. Total locking device on the trailing side of the housing, blocks rolling and swivel motion simultaneously.

3 3RC CONDUCTIVE PEVOTHAN®/PEVOLON® WHEELS

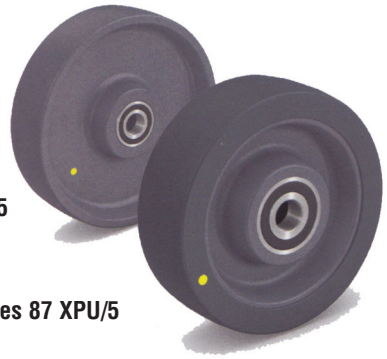

Series AX/5

Series 87 XPU/5

Model Number	Wheel Diameter (mm)	Wheel Width (mm)	Fixing Length (mm)	Hub Length (mm)	Hub Diameter (mm)	Bolt Hole Diameter (mm)	Load Capacity (kg)
87 XPU/080/035/5/12	80	35	31	31	51	12	110
87 XPU/100/040/5/15	100	40	45	41	45	15	160
87 XPU/125/045/5/15	125	45	45	41	45	15	250
87 XPU/150/050/5/20	150	50	55	58	65	20	280
87 XPU/160/050/5/20	160	50	55	51	65	20	300
87 XPU/200/050/5/20	200	50	55	51	60	20	400
87 XPU/080/035/5R/12	80	35	31	31	51	12	110
87 XPU/100/040/5R/15	100	40	45	41	45	15	160
87 XPU/125/045/5R/15	125	45	45	41	45	15	250
87 XPU/150/050/5R/20	150	50	55	58	65	20	280
87 XPU/160/050/5R/20	160	50	55	51	65	20	300
87 XPU/200/050/5R/20	200	50	55	51	60	20	400

1 kg = 2.2 lbs
25.4 mm = 1 inch

Electrically Conductive PEVOTHAN®/PEVOLON® wheels.

Electrically conductive wheel with PEVOLON® rim with a tread made of high-quality thermoplastic polyurethane (96⁰ Shore A), with ball bearings /5 or **stainless ball bearings** /5R.

Model Number	Wheel Diameter (mm)	Wheel Width (mm)	Overall Height (mm)	Top Plate Size (mm)	Bolt Hole Spacing (mm)	Bolt Hole Diameter (mm)	Load Capacity (kg)
AX 080/035/5/12	80	35	35	33	50	12	300
AX 100/040/5/15	100	40	45	41	48	15	450
AX 125/045/5/20	125	40	53	53	60	20	600
AX 150/050/5/20	150	50	55	53	65	20	600
AX 200/050/5/20	200	50	55	53	65	20	1.000
AX 080/035/5R/12	80	35	35	33	50	12	300
AX 100/040/5R/15	100	40	45	41	48	15	450
AX 125/045/5R/20	125	40	53	53	60	20	600
AX 150/050/5R/20	150	50	55	53	65	20	600
AX 200/050/5R/20	200	50	55	54	65	20	1.000

1 kg = 2.2 lbs
25.4 mm = 1 inch

Electrically conductive PEVOLON® wheels with ball bearings.

High-quality thermoplastic polyamide. Wheels in heavy-duty design with ball bearings /5 or **stainless ball bearings** /5R.

All wheels shown can be fitted to U.S. caster yoke sizes

3 3RC KINGPINLESS CASTERS WITH CONDUCTIVE PEVOLON® WHEELS

Series WBX/5
Rigid

Series WLX/5
Swivel

Model Number	Wheel Diameter (mm)	Wheel Width (mm)	Overall Height (mm)	Top Plate Size (mm)	Bolt Hole Spacing (mm)	Bolt Hole Diameter (mm)	Offset (mm)	Load Capacity (kg)
WLX/080/35/5L	80	35	118	105 x 85	80 x 60	9	40	250
WLX/100/40/5L	100	40	140	105 x 85	80 x 60	9	45	350
WLX/125/40/5	125	40	178	135 x 110	105 x 80	11	50	600
WLX/150/50/5	150	50	205	135 x 110	105 x 80	11	50	600
WLX/200/50/5	200	50	250	135 x 110	105 x 80	11	55	400

1 kg = 2.2 lbs
25.4 mm = 1 inch

Swivel Casters with ELECTRICALLY CONDUCTIVE PEVOLON® wheels. Wheel series AX with ball bearings /5.

Model Number	Wheel Diameter (mm)	Wheel Width (mm)	Overall Height (mm)	Top Plate Size (mm)	Bolt Hole Spacing (mm)	Bolt Hole Diameter (mm)	Load Capacity (kg)
WBX/080/35/5L	80	35	118	105 x 85	80 x 60	9	250
WBX/100/40/5L	100	40	140	105 x 85	80 x 60	9	350
WBX/125/40/5	125	40	178	135 x 110	105 x 80	11	600
WBX/150/50/5	150	50	205	135 x 110	105 x 80	11	600
WBX/200/50/5	200	50	250	135 x 110	105 x 80	11	400

1 kg = 2.2 lbs
25.4 mm = 1 inch

Rigid Caster ELECTRICALLY CONDUCTIVE PEVOTHAN® wheels. Precision ball bearings /5 PEVOTHAN® core.

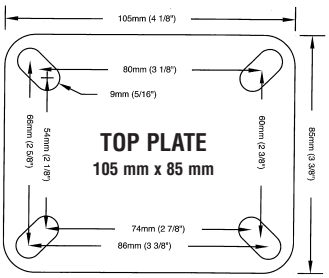

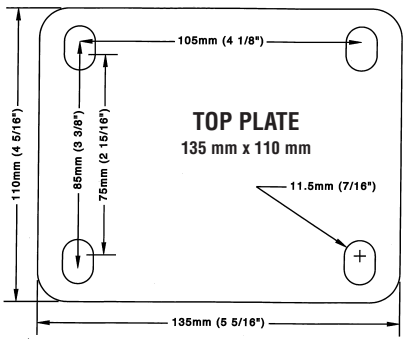

Swivel total lock brake
Specify: WLFX F/...

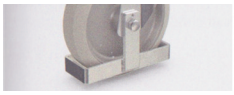

Toe guard
Specify: ...PRO

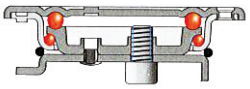

Kingpinless swivel caster cross section a load capacity up to 750 kg.

Swivel section made of pressed steel, zinc chromed with double ball bearings, dust and splash proof, riveted kingpin and grease zerk. Total locking device on the trailing side of the housing, blocks rolling and swivel motion simultaneously.

3 3RCSS STAINLESS STEEL KINGPINLESS CASTERS
WITH CONDUCTIVE PEVOLON® WHEELS

Series WBX NI
Rigid

Series WLX NI
Swivel

Model Number	Wheel Diameter (mm)	Wheel Width (mm)	Overall Height (mm)	Top Plate Size (mm)	Bolt Hole Spacing (mm)	Bolt Hole Diameter (mm)	Offset (mm)	Load Capacity (kg)
WLX NI/080/35/5RL	80	35	118	105 x 85	80 x 60	9	40	250
WLX NI/100/40/5RL	100	40	140	105 x 85	80 x 60	9	45	350
WLX NI/125/40/5R	125	40	178	135 x 110	105 x 80	11	50	600
WLX NI/150/50/5R	150	50	205	135 x 110	105 x 80	11	50	600
WLX NI/200/50/5R	200	50	250	135 x 110	105 x 80	11	55	750

1 kg = 2.2 lbs
25.4 mm = 1 inch

Swivel Stainless Steel Casters with ELECTRICALLY CONDUCTIVE PEVOLON® wheels. Wheel series AX with Stainless Steel ball bearings /5R.

Model Number	Wheel Diameter (mm)	Wheel Width (mm)	Overall Height (mm)	Top Plate Size (mm)	Bolt Hole Spacing (mm)	Bolt Hole Diameter (mm)	Load Capacity (kg)
WLX NI/080/35/5RL	80	35	118	105 x 85	80 x 60	9	250
WLX NI/100/40/5RL	100	40	140	105 x 85	80 x 60	9	350
WLX NI/125/40/5R	125	40	178	135 x 110	105 x 80	11	600
WLX NI/150/50/5R	150	50	205	135 x 110	105 x 80	11	600
WLX NI/200/50/5R	200	50	250	135 x 110	105 x 80	11	750

1 kg = 2.2 lbs
25.4 mm = 1 inch

Rigid Stainless Steel Caster ELECTRICALLY CONDUCTIVE PEVOLON® wheels. With Stainless Steel ball bearings /5R.

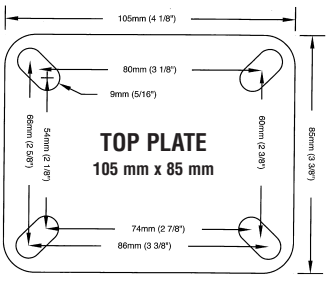

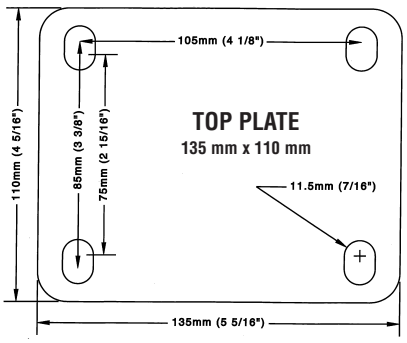

Swivel total lock brake
Specify: WLFX NI F/...

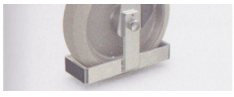

Toe guard
Specify: ...PRO

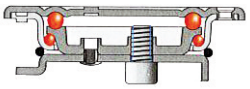

Kingpinless swivel caster cross section a load capacity up to 750 kg.

Swivel section made of pressed steel, zinc chromed with double ball bearings, dust and splash proof, riveted kingpin and grease zerk. Total locking device on the trailing side of the housing, blocks rolling and swivel motion simultaneously.